**InHand Networks**

High-performance, Powerful, Programmable

# VG710 5G Vehicle Gateway

· 5G · Wi-Fi 5 · Telematics

The InVehicle G710 gateway provides high-speed and secure network access for vehicles and transportation services, including special-purpose, heavy equipment, law enforcement, emergency, engineering and ambulance vehicles. The cloud-based fleet management platform provides continuous supervision for logistics management, asset tracking, mobile offices and government security works.

The InVehicle G710 has industrial grade hardware platform, high-speed Wi-Fi and 5G WAN to provide fast, reliable and secure network access for vehicles and vehicle mounted devices. It supports CAN bus for real-time collection of vehicle data; built-in advanced satellite navigation system for continuous accurate positioning; combining with remote analysis software, it supports monitoring of dangerous driving behaviors.

The gateway is embedded with powerful edge computing capability and supports fast custom development by Python and C/C++. It also supports MS Azure and AWS IoT clouds.

**Public Transport**
Buses, long-distance coaches

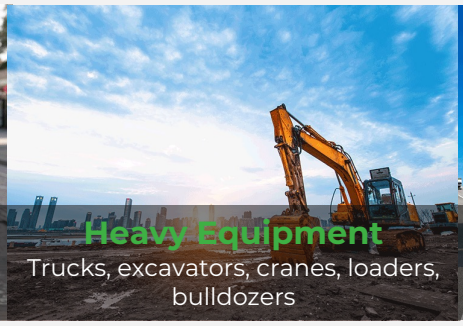

**Heavy Equipment**
Trucks, excavators, cranes, loaders, bulldozers

**Logistics**
Asset tracking, cold chain

**Public Safety**
Law enforcement vehicles, fire trucks, waste collection vehicles

**First Aid**
Ambulances, Tele-health Vehicles

**Special Goods**
Hazardous goods, vaccines, livestock

## Solution

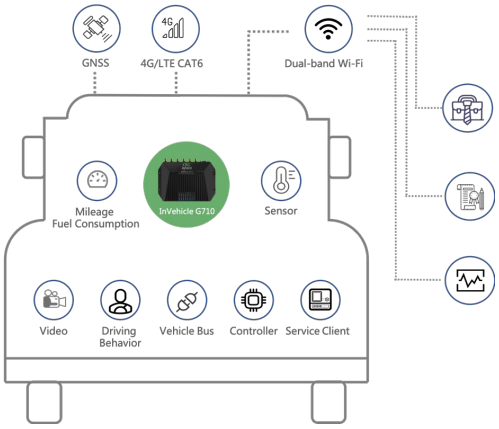

# Features and Advantages

### Robust network access capability

Supports 5G both standalone (SA) and non-standalone (NSA) modes. Download speed up to 2.1Gbps and upload speed up to 450 Mbps. Support TDD and FDD two modes, backward compatible with 4G/3G.

### Designed for vehicles

Designed for challenging operating environments in vehicles. Industrial-grade processor chip ensures continuous operation on-board vehicles. IP64 protection, resistant to challenging conditions like water splash, dust, shock, vibration, damp heat and high and low temperatures.

### Driving behavior monitoring

Integrated 3D accelerometer and gyroscope can help to monitor in real time dangerous driving behaviors like rapid acceleration, sudden braking and sharp turns, as well as collision events. This will help to reduce accidents, protect personnels and cargoes safe with preventive measures, and finally reduce operation losses and improve customer satisfaction.

### Vehicle diagnostics collection

Integrates multiple interfaces including OBD-II and J1939 to collect vehicles diagnostics, and API interface to upload the data to the application platform in real time. By analyzing the diagnostic data, the application platform can timely detect health issues of vehicles, shorten response duration.

### Rich vehicle-mounted I/O

Integrates multiple channels of I/O inputs, outputs, and analog inputs, can connect a wide range of sensors. Integrates Bluetooth 4.1 to connect vehicle-mounted Bluetooth electronic devices. Supports RS232/RS485 serial port, can connect field service devices to implement asset management or service workflow.

### Edge computing

Outstanding edge computing capabilities extend analytical calculation to the network edge within the vehicle, improving the efficiency of data processing, which meets the basic need for real-time business and application intelligence in the Internet of Vehicles (IoV) industry. Supports Node-RED Low-code edge computing solutions.

### Global satellite positioning

72-channel high-precision high-sensitivity global satellite positioning system.

### Inertial navigation

Integrates inertial navigation system. When GNSS positioning becomes inaccurate due to weak signal, no signal or multi-path effect, the gateway will still provide excellent positioning accuracy.

### Fleet management platform

Supports access to InHand or a 3rd-party fleet management platform to perform: task assignment, route planning, vehicle tracking, real-time messaging, geofencing, etc.

# Dimensions (mm)

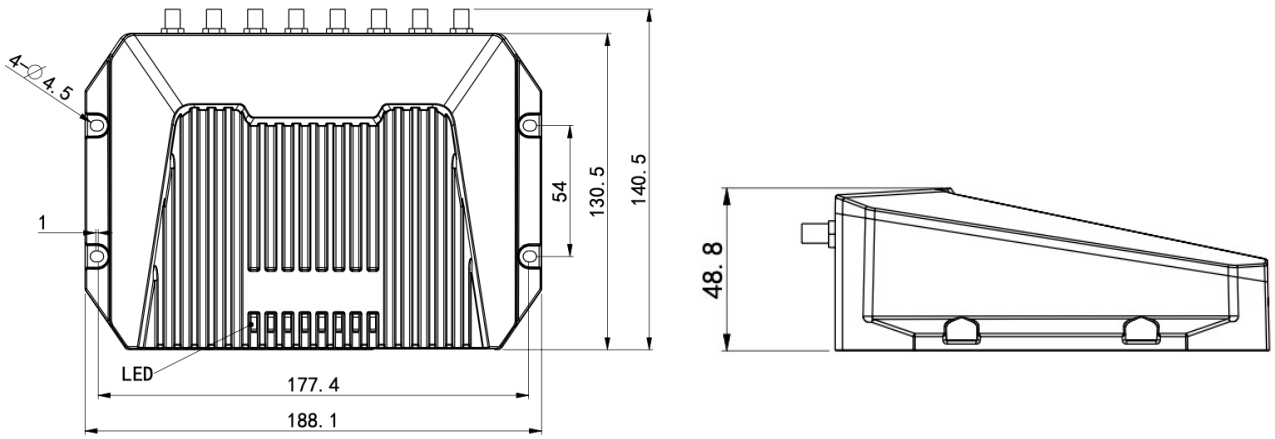


Dimensions: 188.1*140.5*48.8 (mm)

# Product Specifications

| VG710 Hardware Specifications | | | |
|---|---|---|---|
| **Hardware Platform** | | | |
| CPU | ARM Cortex A7 | RAM | 1 GB DDR3 |
| FLASH | 8GB eMMc | Main Frequency | 717 MHz |
| **Satellite Navigation** | | | |
| GNSS Receiver | GPS, GLONASS, Galileo, Beidou | | |
| Built-in Sensor | Inertial navigation sensor (accelerometer and gyroscope) | | |
| Positioning Deviation | 11.5m (With SBAS), 2.5m (Autonomous), ADR (Optional) | | |
| Tracking Sensitivity | -160 dBm | Location Update Rate | MAX 10Hz |
| **Interfaces** | | | |
| Cellular | 5G SA/NAS Sub-6 or 4G CAT 6 | | |
| Ethernet | 4*10/100/1000 Mbps RJ45 interface | | |
| MicroSD | Up to 32GB, 20 MB/s | Bluetooth | Bluetooth 4.1 |
| Antenna | SMA-K: Cellular, GNSS; RPSMA-K: 2*Wi-Fi, Bluetooth | | |
| Indicator | System, Cellular, Signal, GNSS, Wi-Fi 2.4G, Wi-Fi 5G, U1, U2 | | |
| **Wi-Fi** | | | |
| Frequency | 2.4 / 5GHz dual-band | Protocol | Wi-Fi 5 |
| Maximum Output | 2.4G: 17dBm; 5G: 17dBm | Working Mode | AP / Client |
| **Automotive Interfaces** | | | |
| Diagnostics Interfaces | 2*CAN bus, 1*J1708, 1*LIN Bus | | |
| DO/DI/AI | 2*DO, 4*DI/AI or 2*DI/AI | Audio/Voice | R, L, Mic |
| Serial Port | 1*RS232, 1*RS485 | Other | 1 WIRE (driver ID / temperature sense) |
| **Power Supply** | | | |
| PIN Definition | V+, V-, ignition signal, NC (4 pins) | | |
| Input Voltage | 9-36VDC [configurable to 7-36VDC] | | |
| Protection | Built-in voltage transient protection, with delayed ignition induction | | |
| Standby Power | 0.006W - monitors ignition signal only; system starts on ignition | | |
| Operating Power | 12.00W - average when RF module not running at full load | | |
| Peak Power | 18.20W - peak value when RF module running at full load | | |
| **Mechanical Features** | | | |
| Installation | Wall-mounting | Protection Rating | IP64 |
| Cooling | Radiation cooling | Housing | Die-cast aluminum |
| Dimensions (W*D*H) | 188.1*104.5*48.8 (mm) | Weight | 775g |
| SIM Card Slot | Dual SIM | SIM Card Spec. | 2FF |
| **Environment** | | | |
| Operating Temp. | -30 ° C ~ +70 ° C<br>-22 ° F ~ +158 ° F | Storage Temp. | -40 ° C ~ +85 ° C<br>-40 ° F ~ +185 ° F |
| Humidity | 95% RH @ 60° C | Start-up | -35 ° C / -35 ° F |
| **Vehicle** | | | |
| Vehicle Standard | ECE-R10, R118 | Rail Standard | EN50155, EN50121<br>EN61373, EN45545 |
| EMC | Level 3 (EN61000-4-2, EN61000-4-3, EN61000-4-4, EN61000-4-5, EN61000-4-6, EN61000-4-18) | | |
| **Physical** | | | |
| Shock | IEC60068-2-27 | Vibration | IEC60068-2-6 |
| Free Fall | IEC60068-2-32 | | |
| **Certification** | | | |
| Certification | CE, E-Mark, ITxPT, FCC, IC, PTCRB, RoHS, VZW, AT&T, TMO | | |
| Warranty | 3 years | | |

| VG710 Software Specifications | | | |
|---|---|---|---|
| **Network Connection** | | | |
| Network Access | APN, VPDN | LAN Protocol | ARP, Ethernet |
| Access Authentication | CHAP/PAP/MS-CHAP/MS-CHAP V2 | | |
| **Network Protocols** | | | |
| IP Application | IPv6, Ping, Traceroute, DHCP server/relay/client, DNS relay, DDNS, Telnet, SSH, HTTP, HTTPS, TFTP, FTP, SFTP, Portal | | |
| IP Routing | Static routing, RIP, OSPF, BGP, IGMP Proxy | | |
| **Network Security** | | | |
| Firewall | SPI, DoS attack defense, multicast/Ping probe filter, ACLs, Supports NAT, PAT, DMZ, port mapping, virtual server | | |
| User Level | 2 levels: administrator; read-only user | | |
| AAA | Local authentication, Radius, Tacacs+, LDAP | | |
| CA Certificate | PEM, PKCS12, SCEP | | |
| VPN | IPsec VPN, L2TP, GRE, OPENVPN, CA | | |
| **Reliability** | | | |
| Backup | Floating routing, VRRP, interface backup | | |
| Link Detection | Sends heartbeat packet to detect, auto redial when disconnected | | |
| Watchdog | Runs self-detection and auto-repairing of device faults | | |
| Offline Storage | Built-in cache, records key data when network unavailable | | |
| **Ports** | | | |
| VLAN Partition | Supported | | |
| **WLAN** | | | |
| Protocol | IEEE802.11 b/g/n/a/ac | | |
| Security | Shared key, WPA/WPA2 authentication, WEP/TKIP/AES encryption | | |
| **Network Management** | | | |
| Configuration | Local or remote HTPP, HTTPS, Telnet, SSH | | |
| Upgrade | Local or remote WEB, DM, TFTP, FTP, SFTP server | | |
| AAA | Local / Radius / TACACS + | | |
| Network Diagnostics | Ping, Traceroute, Sniffer (network packet capturing tool) | | |
| **Edge Computing Framework** | | | |
| Edge Computing Platform | An edge computing platform integrating network, computing, storage and applications | | |
| Programmable | Python, C/C++ & Docker | | |
| SDK | Python 3 SDK, Docker SDK and Azure IoT Edge SDK | | |
| IDE | Visual Studio Code | | |
| IoT Architecture | Supports MQTT, DDS, AMQP, XMPP, JMS, REST, CoAP | | |
| 3rd Party Cloud | MS Azure, SmartFleet and development APIs for other third-party platforms | | |
| Docker Images | Node-RED, Ubuntu, Docker for ARM 32, etc. | | |
| **Application Services** | | | |
| Cloud Services | Device Manager: remote management of VG710 online<br>InConnect: Quickly building of private networks and access to devices connected to VG710 at any time | | |
| Vehicle Telemetry | Rich interfaces for vehicle telemetry and asset tracking devices | | |
| Event Alarm | Customizable event alarms: digital input, network, service status, power supply, temperature, voltage, etc. | | |
| Message Push | SMS, Email, App, device digital output | | |

# Ordering Guide

| Model | Model code: VG710–H-<WMNN> | | | | | |
|---|---|---|---|---|---|---|
| | <WMNN>: Cellular Type & Module | CAN bus | GNSS | Wi-Fi 5 | Bluetooth | Region |
| **VG710-H-NRQ3** | 5G NR NSA: n1/n2/n3/n5/n7/n8/n12/n20/n25/n28/n38 /n40/n41/n48*/n66/n71/n77/n78/n79<br>5G NR SA: n1/n2/n3/n5/n7/n8/n12/n20/n25/n28/n38 /n40/n41/n48*/n66/n71/n77/n78/n79<br>LTE-FDD: B1/B2/B3/B4/B5/B7/B8/B9/B12(B17)/B13/B14/B18 /B19/B20/B25/B26/B28/B29/B30/B32/B66/B71<br>LTE-TDD: B34/B38/B39/B40/B41/B42/B43/B48<br>LTE Category: DL CAT20/UL CAT18<br>LAA: B46 WCDMA Bands:B1/B2/B3/B4/B5/B6/B8/B19 | 2 | √ / UDR | √ | √ | Global (except for China) |
| **VG710-H-NRR2** | (5G NR NSA: n41/n78/n79<br>5G NR SA: n1/n28*/n41/n77/n78/n79<br>LTE FDD: B1/B2/B3/B5/B7/B8/B20/B28<br>LTE TDD: B34/B38/B39/B40/B41<br>WCDMA: B1/B2/B5/B8 | 2 | √ / UDR | √ | √ | China |
| **VG710-H-FQ59** | LTE CAT6<br>LTE-FDD B1/B3/B5/B7/B8/B20/B28/B32<br>LTE-TDD B38/B40/B41<br>WCDMA B1/B3/B5/B8 | 2 | √ / UDR | √ | √ | EMEA/APAC/ Brazil |

# Pin Out Diagram

**IO 20PIN Definition**

| PIN | 1 | 2 | 3 | 4 | 5 | 6 | 7 | 8 | 9 | 10 |
|---|---|---|---|---|---|---|---|---|---|---|
| Def. | L_Channel | Mic IN | RS_485A | GND | RS232_TX | 1Wire | DO1 | GND | AI1/DI1 | AI3/DI3/FWD |
| PIN | 11 | 12 | 13 | 14 | 15 | 16 | 17 | 18 | 19 | 20 |
| Def. | R_Channel | GND | RS_485B | GND | RS232_RX | GNSS_1PPS | DO2 | GND | AI2/DI2 | AI4/DI4/WHEELTICK |

**EXT 10PIN Definition**

| PIN | 1 | 2 | 3 | 4 | 5 |
|---|---|---|---|---|---|
| Def. | K_LINE | CAN0_H | GND | CAN1_H | J1708_A |
| PIN | 6 | 7 | 8 | 9 | 10 |
| Def. | L_LINE | CAN0_L | GND | CAN1_L | J1708_B |

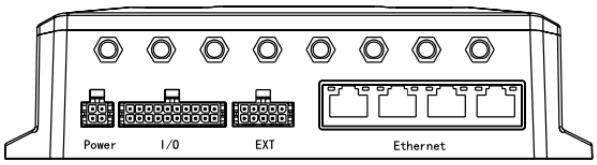


InHand Networks

File no.: IPC Version 1.6 2024 © 2024 InHand Networks. All rights reserved.
InHand Networks reserves the right to update or modify this document at any time without prior notice.