InHand Networks

High-performance, Powerful, Programmable

VG710 4G Vehicle Gateway

· 5G/LTE · Wi-Fi 5 · Telematics

The InVehicle G710 gateway provides high-speed and secure network access for vehicles and transportation services, including special-purpose, heavy equipment, law enforcement, emergency, engineering and ambulance vehicles. The cloud-based fleet management platform provides continuous supervision for logistics management, asset tracking, mobile offices and government security works.

The InVehicle G710 has industrial grade hardware platform, high-speed Wi-Fi and 5G/LTE WAN to provide fast, reliable and secure network access for vehicles and vehicle mounted devices. It supports CAN bus for real-time collection of vehicle data; built-in advanced satellite navigation system for continuous accurate positioning; combining with remote analysis software, it supports monitoring of dangerous driving behaviors.

The gateway is embedded with powerful edge computing capability and supports fast custom development by Python and C/C++. It also supports MS Azure and AWS IoT clouds.

Public Transport
Buses, long-distance coaches

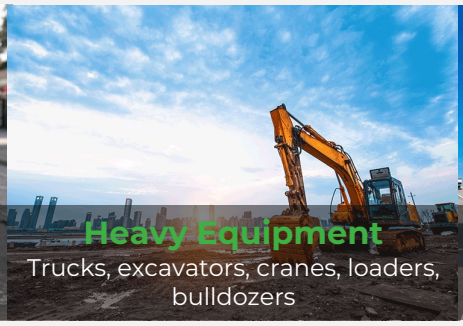

Heavy Equipment
Trucks, excavators, cranes, loaders, bulldozers

Logistics
Asset tracking, cold chain

Public Safety
Law enforcement vehicles, fire trucks, waste collection vehicles

First Aid
Ambulances, Tele-health Vehicles

Special Goods
Hazardous goods, vaccines, livestock

Solution

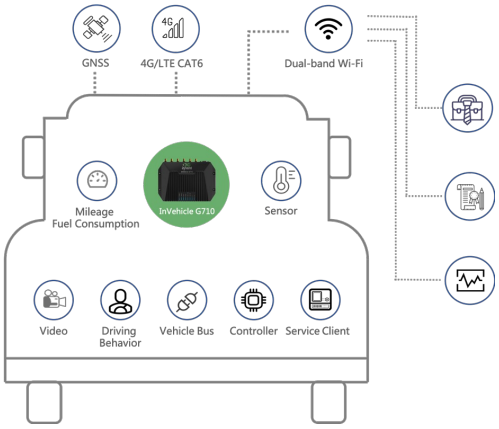

Features and Advantages

Designed for vehicles

Designed for challenging operating environments in vehicles. Industrial-grade processor chip ensures continuous operation on-board vehicles. IP64 protection, resistant to challenging conditions like water splash, dust, shock, vibration, damp heat and high and low temperatures.

Global satellite positioning

72-channel high-precision high-sensitivity global satellite positioning system, tracks vehicle locations precisely at any time anywhere..

Inertial navigation

Integrates inertial navigation system. When GNSS positioning becomes inaccurate due to weak signal, no signal or multi-path effect, the gateway will still provide excellent positioning accuracy, enabling continuous accurate tracking of the vehicle.

Driving behavior monitoring

Integrated 3D accelerometer and gyroscope can help to monitor in real time dangerous driving behaviors like rapid acceleration, sudden braking and sharp turns, as well as collision events. This will help to reduce accidents, protect personnels and cargoes safe with preventive measures, and finally reduce operation losses and improve customer satisfaction.

Vehicle diagnostics collection

Integrates multiple interfaces including OBD-II and J1939 to collect vehicles diagnostics, and API interface to upload the data to the application platform in real time. By analyzing the diagnostic data, the application platform can timely detect health issues of vehicles, shorten response duration.

Rich vehicle-mounted I/O

Integrates multiple channels of I/O inputs, outputs, and analog inputs, can connect a wide range of sensors. Integrates Bluetooth 4.1 to connect vehicle-mounted Bluetooth electronic devices. Supports RS232/RS485 serial port, can connect field service devices to implement asset management or service workflow.

Edge computing

Outstanding edge computing capabilities extend analytical calculation to the network edge within the vehicle, improving the efficiency of data processing, which meets the basic need for real-time business and application intelligence in the Internet of Vehicles (IoV) industry. Supports Node-RED Low-code edge computing solutions.

Fleet management platform

Supports access to InHand or a 3rd-party fleet management platform to perform: task assignment, route planning, vehicle tracking, real-time messaging, geofencing, etc.

Developer features

The comprehensive secondary development platform opens key system resources to users, facilitating fast development and deployment of custom applications. Integrating cloud-end IoT SDK, enables quick building of AWS, Azure and other mainstream clouds based applications.

Dimensions (mm)

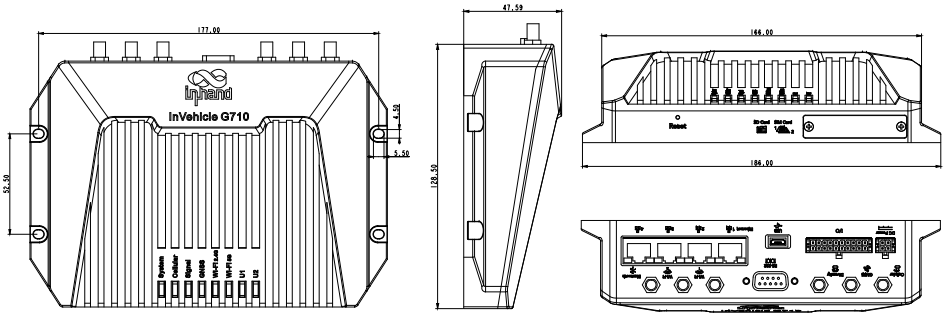

20PIN Definition

PIN	Definition	PIN	Definition
1	-485	11	485
2	CANL	12	CANH
3	1-Wire	13	GND
4	DO4	14	DO3
5	DO2	15	DO1
6	GND	16	GND
7*	AI6/DI6	17*	AI5/DI5
8	AI4/DI4	18	AI3/DI3
9	AI2/DI2	19	AI1/DI1
10	GND	20	GND

7*: AI6/DI6/FWD
17*: AI5/DI5/WHEELTICK

Dimensions: 236*172.5*58.5 (mm)

Product Specifications

VG710 Hardware Specifications			
Hardware Platform			
CPU	ARM Cortex A7	RAM	1 GB/512MB DDR3
FLASH	8GB eMMc	Main Frequency	717 MHz
Satellite Navigation			
GNSS Receiver	GPS, GLONASS, Galileo, Beidou		
Built-in Sensor	Inertial navigation sensor (accelerometer and gyroscope)		
Positioning Deviation	1.5m (With SBAS); 2.5m (Autonomous)		
Tracking Sensitivity	-160 dBm	Location Update Rate	MAX 10Hz
Interfaces			
Cellular	LTE CAT 6/CAT4	Ethernet	4*10/100/1000 Mbps RJ45 interface
Serial Port	RS232 serial (DB-9)	USB Port	USB2.0 Micro-B (Read-write: Max 480Mbps)
MicroSD	Micro SD Card (up to 32GB, 20MB/s)	Bluetooth	Bluetooth 4.1
Antenna	SMA-K: Cellular, GNSS, Diversity; RPSMA-K: 2*Wi-Fi, Bluetooth		
Indicator	System, LTE, Signal, GNSS, Wi-Fi 2.4G, Wi-Fi 5G, U1, U2		
Wi-Fi			
Frequency	2.4 / 5GHz dual-band	Protocol	Wi-Fi 5
Maximum Output	2.4G: 17dBm; 5G: 17dBm	Working Mode	AP / Client
Automotive Interfaces			
Diagnostics Interface	CAN bus	DI/DO/AI	6*DI, 4*DO, 6*AI
RS485	RS485 serial (A+, B-, GND)	Other	1 WIRE (driver ID / temperature sense)
Power Supply			
PIN Definition	V+, V-, ignition signal, NC (4 pins)		
Input Voltage	9-36VDC [configurable to 7-36VDC]		
Protection	Built-in voltage transient protection, with delayed ignition induction		
Standby Power	0.006W - monitors ignition signal only; system starts on ignition		
Operating Power	12.00W - average when RF module not running at full load		
Peak Power	18.20W - peak value when RF module running at full load		
Mechanical Features			
Installation	Wall-mounting	Protection Rating	IP64
Cooling	Radiation cooling	Housing	Die-cast aluminum
Dimensions (W*D*H)	188.1*104.5*48.8 (mm)	Real Time Clock	Supported
Weight	775g		
SIM Card Slot	Dual SIM	SIM Card Spec.	2FF
Environment			
Operating Temp.	-30 °C ~ +70 °C -22 °F ~ +158 °F	Storage Temp.	-40 °C ~ +85 °C -40 °F ~ +185 °F
Humidity	95% RH @ 60°C		
Vehicle			
Vehicle Standard	ECE-R118, IEC60068-2-31	Rail Standard	EN50155, EN50121 EN61373, EN45545
EMC	Level 3 (EN61000-4-2, EN61000-4-3, EN61000-4-4, EN61000-4-5, EN61000-4-6, EN61000-4-18)		
Physical			
Shock	IEC60068-2-27	Vibration	IEC60068-2-6
Free Fall	IEC60068-2-32		
Certification			
Certification	CE, E-Mark, ITxPT, FCC, IC, PTCRB, RoHS, VZW, AT&T, TMO		
Warranty	3 years		

VG710 Software Specifications			
Network Connection			
Network Access	APN, VPDN	LAN Protocol	ARP, Ethernet
Access Authentication	CHAP/PAP/MS-CHAP/MS-CHAP V2		
Network Protocols			
IP Application	IPv6,Ping, Traceroute, DHCP server/relay/client, DNS relay, DDNS, Telnet, SSH, HTTP, HTTPS, TFTP, FTP, SFTP, Portal		
IP Routing	Static routing, RIP, OSPF, BGP, IGMP Proxy		
Network Security			
Firewall	SPI, DoS attack defense, multicast/Ping probe filter, ACLs, Supports NAT, PAT, DMZ, port mapping, virtual server		
User Level	2 levels: administrator; read-only user		
AAA	Local authentication, Radius, Tacacs+, LDAP		
CA Certificate	PEM, PKCS12, SCEP		
VPN	IPsec VPN, L2TP, GRE, OPENVPN, CA		
Reliability			
Backup	Floating routing, VRRP, interface backup		
Link Detection	Sends heartbeat packet to detect, auto redial when disconnected		
Watchdog	Runs self-detection and auto-repairing of device faults		
Offline Storage	Built-in cache, records key data when network unavailable		
Ports			
VLAN Partition	Supported	Port Mirroring	Supported
WLAN			
Protocol	IEEE802.11 b/g/n/a/ac		
Security	Shared key, WPA/WPA2 authentication, WEP/TKIP/AES encryption		
Network Management			
Configuration	Local or remote HTPP, HTTPS, Telnet, SSH		
Upgrade	Local or remote WEB, DM, TFTP, FTP, SFTP server		
AAA	Local / Radius / TACACS +		
Network Diagnostics	Ping, Traceroute, Sniffer (network packet capturing tool)		
Edge Computing Framework			
Edge Computing Platform	An edge computing platform integrating network, computing, storage and applications		
Programmable	Python, C/C++ & Docker		
SDK	Python 3 SDK, Docker SDK and Azure IoT Edge SDK		
IDE	Visual Studio Code		
IoT Architecture	Supports MQTT, DDS, AMQP, XMPP, JMS, REST, CoAP		
3rd Party Cloud	MS Azure, SmartFleet and development APIs for other third-party platforms		
Docker Images	Node-RED, Ubuntu, Docker for ARM 32, etc.		
Application Services			
Fleet Management Cloud	InHand SmartFleet cloud platform: task allocation, route planning, vehicle tracking, real-time messaging, geofencing, batch firmware upgrade, batch configuration backup, application upgrade		
Vehicle Telemetry	Rich interfaces for vehicle telemetry and asset tracking devices		
Event Alarm	Customizable event alarms: digital input, network, service status, power supply, temperature, voltage, etc.		
Message Push	SMS, Email, App, device digital output		

Ordering Guide

Model	Model code: VG710-<L/NA>-<WMNN>							
	<WMNN>: Cellular Type & Module	UE Category	<L/NA>: RAM	CAN bus	GNSS	Wi-Fi	Bluetooth	Region
VG710-L-FQ09	LTE-FDD B1/ 2/ 3/ 4/ 5/ 7/ 8/ 12/ 13/ 14/ 17/ 18/ 19/ 20/ 25/ 26/ 28/ 29/ 30/ 32/ 66/ 71 LTE-TDD B34/ 38/ 39/ 40/ 41/ 42/ 43/46 (LAA)/ 48 (CBRS) WCDMA B1/ 2/ 3/ 4/ 5/ 6/ 8/ 19	LTE CAT6	1 GB	√	√	√	√	Global
VG710-L-FS39	LTE-FDD Band2/4/5/12/13/17/29 UMTS/HSPA+Band2/4/5 GSM/GPRS/EDGE 850/900/1800/1900MHz	LTE CAT6	1 GB	√	√	√	√	North America, Latin America, Caribbean Coast
VG710-L-FS59	LTE-FDD Band1/3/5/7/8/1819/20/26/28A/28B LTE-TDD Band38/39/40/41 UMTS/HSPA+Band1/3/5/6/8 TD-SCDMA Band34/39 GSM/GPRS/EDGE900/1800MHz	LTE CAT6	1 GB	√	√	√	√	Europe, Africa, Asia, Oceania
VG710-L-FQ78	LTE-FDD Band1/2/3/4/5/7/8/28 LTE-TDD Band40 WCDMA Band1/2/5/8 GSM/EDGE Band2/3/5/8	LTE CAT4	1 GB	√	√	√	√	Latin America, Australia, New Zealand
VG710-FQ09	LTE-FDD B1/ 2/ 3/ 4/ 5/ 7/ 8/ 12/ 13/ 14/ 17/ 18/ 19/ 20/ 25/ 26/ 28/ 29/ 30/ 32/ 66/ 71 LTE-TDD B34/ 38/ 39/ 40/ 41/ 42/ 43/46 (LAA)/ 48 (CBRS) WCDMA B1/ 2/ 3/ 4/ 5/ 6/ 8/ 19	LTE CAT6	512 MB	√	√	√	√	Global
VG710-FS39	LTE-FDD Band2/4/5/12/13/17/29 UMTS/HSPA+Band2/4/5 GSM/GPRS/EDGE 850/900/1800/1900MHz	LTE CAT6	512 MB	√	√	√	√	North America, Latin America, Caribbean Coast
VG710-FS59	LTE-FDD Band1/3/5/7/8/18/19/20/26/28A/28B LTE-TDD Band38/39/40/41 UMTS/HSPA+Band1/3/5/6/8 TD-SCDMA Band34/39 GSM/GPRS/EDGE900/1800MHz	LTE CAT6	512 MB	√	√	√	√	Europe, Africa, Asia, Oceania
VG710-FQ78	LTE-FDD Band1/2/3/4/5/7/8/28 LTE-TDD Band40 WCDMA Band1/2/5/8 GSM/EDGE Band2/3/5/8	LTE CAT4	512 MB	√	√	√	√	Latin America, Australia, New Zealand
Example	VG710-FQ09 vehicle-mounted gateway, 4 Ethernet interfaces, one DB-9 RS232 serial port, RS485 serial port, MicroUSB2.0 serial port, supports DC-HSPA+ networks, supports CANBUS, GNNS global satellite positioning, WLAN dual-band Gigabit wireless LAN, and Bluetooth, can be use Global.							

Accessories

Antenna	Order Code	Specifications
LTE 4G Antenna	AANT090025	LTE/GSM/CDMA/DCS/PCS/WCDMA/UMTS/HSDPA/GPRS/EDGE 824-960MHz, 1710-2700Mhz 1M RG-174 cable with SMA-J1.5 connector, dimensions: 2000±20mm
GNSS Antenna	AANT040005	GPS/GALILEO: 27±2 dB@1575.42MHz GLONASS: 27±2 dB@1602MHz, dimensions: 55.6x50.5m
GNSS Antenna	AANT040006	GPS/GALILEO: 27±2 dB@1575.42MHz GLONASS: 27±2 dB@1602MHz, dimensions: 50x38.5mm
Wi-Fi Antenna (Rubber Ducky)	AANT060016	2400~2500MHz / 4900~5850MHz, peak gain 5±0.5dBi
Wi-Fi Antenna (Antenna Adhesive)	AANT060018	2400~2500MHz / 4900~5850MHz, peak gain ≤ 3dBi, dimensions: 2000±20mm
Bluetooth Antenna (Rubber Ducky)	AANT060017	2.4GHz, peak gain ≤ 2dBi
Cable	**Order Code**	**Specifications**
Power Cable	SCAB000216	The cable has A and B ends: A is 4PIN end to connect to VG710; B is open end, suitable for field engineering projects. To perform indoor testing, a power adapter needs to be prepared separately.
20 PIN Extension Cord	SCAB000219	The cable has A and B ends: A is 20PIN end to connect to VG710; B is open end, suitable for field engineering projects and testing.
OBD-II Power Cable	SCAB000235	P1 is 20PIN; P2 is 4PIN power terminal; P3 is OBD-II male; P4 is I/O open end, suitable for engineering projects; P5 is ignition signal cable, please connect to the ignition signal of the vehicle before use. Suitable for field engineering projects.
J1939 9PIN Power Cable	SCAB000234	P1 is 20PIN; P2 is 4PIN power terminal; P3 is J1939 9PIN female; P4 is I/O open end, suitable for engineering projects; P5 is ignition signal cable, please connect to the ignition signal of the vehicle before use. Suitable for field engineering projects.
J1939 6PIN Power Cable	SCAB000233	P1 is 20PIN; P2 is 4PIN power terminal; P3 is J1939 6PIN female; P4 is I/O open end, suitable for engineering projects; P5 is ignition signal cable, please connect to the ignition signal of the vehicle before use. Suitable for field engineering projects
20 PIN to OBD-II	SCAB000215	This cable has A, B, C and D ends: A is 20PIN female; B is OBD female; C is A duplicate but male; D is OBD male, suitable for field engineering projects and testing.

InHand Networks

File No. : Version 2.10 2024 © InHand Networks. All rights reserved.
InHand Networks reserves the right to update or modify this document at any time without prior notice.